ST-73 Foam Lance

Description

The ST-73 is for foaming suitable foaming agents. The ST-73 foam lance is fitted with an interchangeable injector nozzle and a foaming pad. By turning an adjustable grip handle the concentration of foaming agent in the water can be adjusted.

Available are an optional 1-litre intake container (Product Code 02 0073 513) or 2-litre intake container (Product Code 02 0073 514).

General safety notes

- To guarantee safe operation the injector unit may only be used in accordance with these Operating Instructions.
- Keep these Operating Instructions in a safe place for later reference.
- Please also observe the safety instructions for the detergent and if applicable of the high pressure cleaner manufacturer.
- Do not mix detergents one with the other.
- Wear suitable protective clothing and gloves when working.
- Never direct the high-pressure jet at persons or other living creatures.
- Read the safety data sheets and observe the corresponding safety and handling regulations.

Flush the foam lance internally and externally with clear water after use. Otherwise there is the risk that that substances adhering accumulate and adversely affect proper functioning of the foam lance.

Intended use

- The ST-73 foam lance is used for admixing foaming agent to water, subsequent foaming and then foam application.
- Only Pressure Equipment Directive (PED) Group 2 liquids may be used as media. In case of doubt contact the equipment manufacturer.
- The unit may only be used with a suitable pressure generator.
- The unit is not designed for use with persons (children included) with restricted sensory and mental capabilities due to lack of experience and/or lack of knowledge unless they are supervised by a person responsible for their safety or if they have received instruction from that person in use of the equipment.
- In general children are forbidden to use this equipment.

Flush the foam lance internally and externally with clear water after use. Otherwise there is the risk that that substances adhering accumulate and adversely affect proper functioning of the foam lance

Operartion

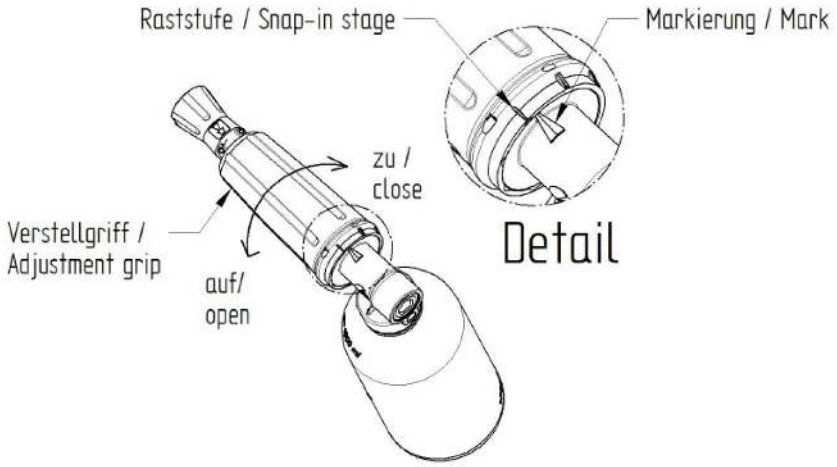

By turning the adjustable grip on the handle the quantity of foaming agent concentrate can be adjusted. In total the ST-73 has five detent stages for fixed positioning the dosage setting and these are gently noticeable on turning the adjustable grip.

In Position I = lowest concentration

In Position IIIII = highest concentration

Flush the foam lance through after use internally and externally with clear water.

Otherwise there is the risk that that substances adhering accumulate and adversely affect proper functioning of the foam lance.

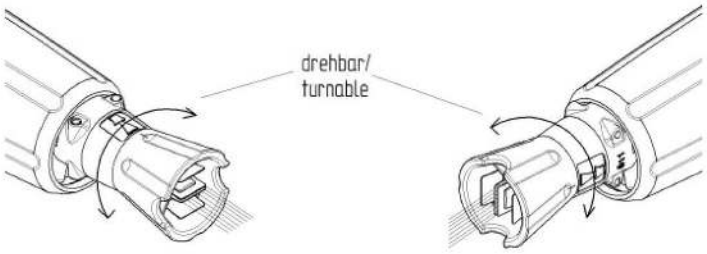

The flat steel nozzle at the ST-73 foam lance can be rotated to any position. For this you only have to turn the nozzle guard in the desired direction.

Cleaning / Changing filter pad and injector nozzle

If the foam pattern is not as desired, amongst other things the cause may lie with the filter pad or injector nozzle. If this is the case carry out the following remedial steps:

Cleaning / changing filter pad

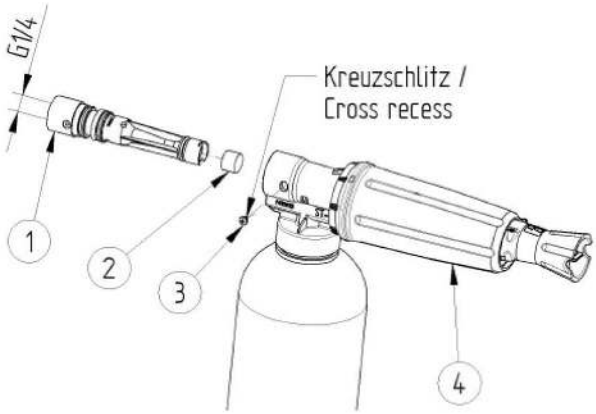

1. Loosen the locking screw (3) with a cross-head screwdriver.
2. Screw a component with a G ¼ external thread, e.g. a short tube, into the injector unit (1).
3. Withdraw the injector unit slowly from the ST-73 foam lance (4).
4. From the injector unit (1), remove the foam pad (2).
5. Rinse the filter pad under clear running water and if the filter pad (2) is damaged replace it (Product Code: 04 0073 503).
6. Check to see, before reassembling the foam lance, whether all O-rings on the injector unit are in serviceable condition and replace these if necessary (dealer's parts list).
7. Now reassemble in reverse order.

Cleaning / changing injector nozzle

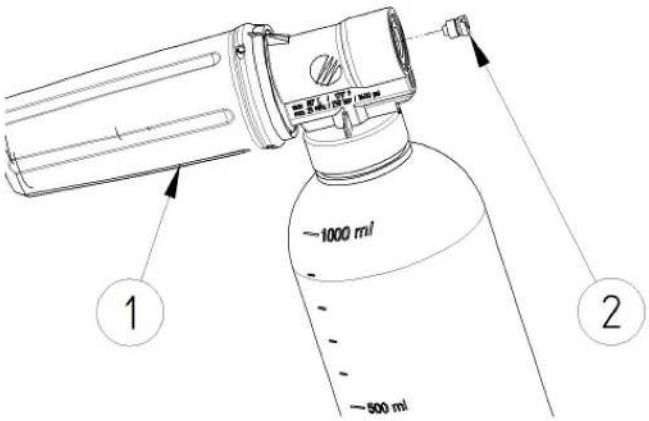

1.

2. Unscrew the injector nozzle (1) from the ST-73 foam lance (2)

3. Check to see whether the injector nozzle (1) is only lightly soiled, in which case careful cleaning by inserting a suitable piece of wire or the like will frequently solve the problem. Note the corresponding bore of the injector nozzle (1) here! Otherwise this can get damaged. It is also recommended to rinse the injector nozzle clean under running water and the nozzle itself should be aligned with the direction of the water throughput.

4. In the event of high soiling and/or dirt often the only remedy is to exchange the injector nozzle (1) (dealer's parts list).

5. Check to see, before reassembling the foam lance, whether all O-rings on the injector unit are in serviceable condition and replace these if necessary (dealer's parts list).

Technical data

Modell	ST-73
Max. Druck	300 bar
Min. Druck	70 bar
Max. Volumenstrom 1,25 Düse	12 Liter/min
Max. Volumenstrom 1,8 Düse	27 Liter/min
Gewicht	ca. 0,5 kg